City of Conway – Mayor's Office
1201 Oak Street
Conway, AR 72032
www.cityofconway.org

Invitation and Bid – 2010-21

INVITATION

TO THE VENDOR ADDRESSED:

Bidders are invited to offer to purchase the items listed herein in accordance with the terms and conditions attached. **Sealed** bids must be in the Office of the Mayor not later than **10 am, Thursday, February 18th, 2010** at which time all bids will be opened and read in the Downstairs Conference Room in City Hall. Successful bidders will receive purchase order, if necessary, within 30 days after the City Council approval. ***Unsigned bids will be rejected.***

City of Conway – Sanitation Department

BID SPECIFICATIONS

Platforms & Stairs for

AUTOMATED SORTING LINE

CITY OF CONWAY BID SPECIFICATIONS

PLATFORMS & STAIRS FOR AUTOMATED SORTING LINE

- It is intended that the following set of bid specifications be used as a guideline for stairs and sorting platforms for the City of Conway Automated sorting line.
- All specification are set forth to work in conjunction with the sorting line to be installed by Marathon Equipment Co.
- Bidder must be able to install equipment on a time frame set forth by Marathon Equipment installers.
- Bidder is responsible for manufacturing stairs and platforms to comply with all OSHA, Department of Labor, and City of Conway requirements.
- Platforms shall be medium blue and stairs and handrails shall be safety yellow.
- Bidder is responsible for the manufacturing and installation of these units.
- For more information contact Danny Cundiff @ Marathon Equip. Phone # 1-800-633-8974 ext. 1086
- Fiber platform, fiber chutes, control cabin, main sorting platform, and left hand bag breaker platforms must be installed on March 15, 2010.
- Control cabin must be completed and installed on March 17, 2010
- Bag breaker and OCC platforms must be installed on March 22, 2010.
- Container platforms must be installed on March 24, 2010.
- Plastic platforms must be installed on April 1, 2010.

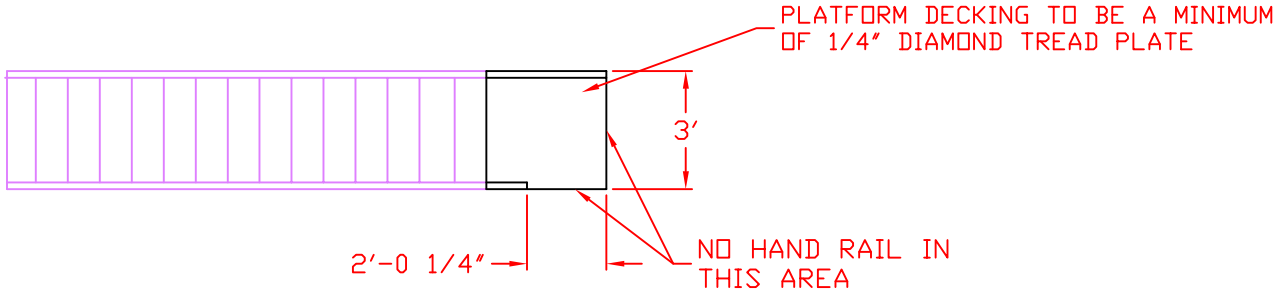

TOP VIEW

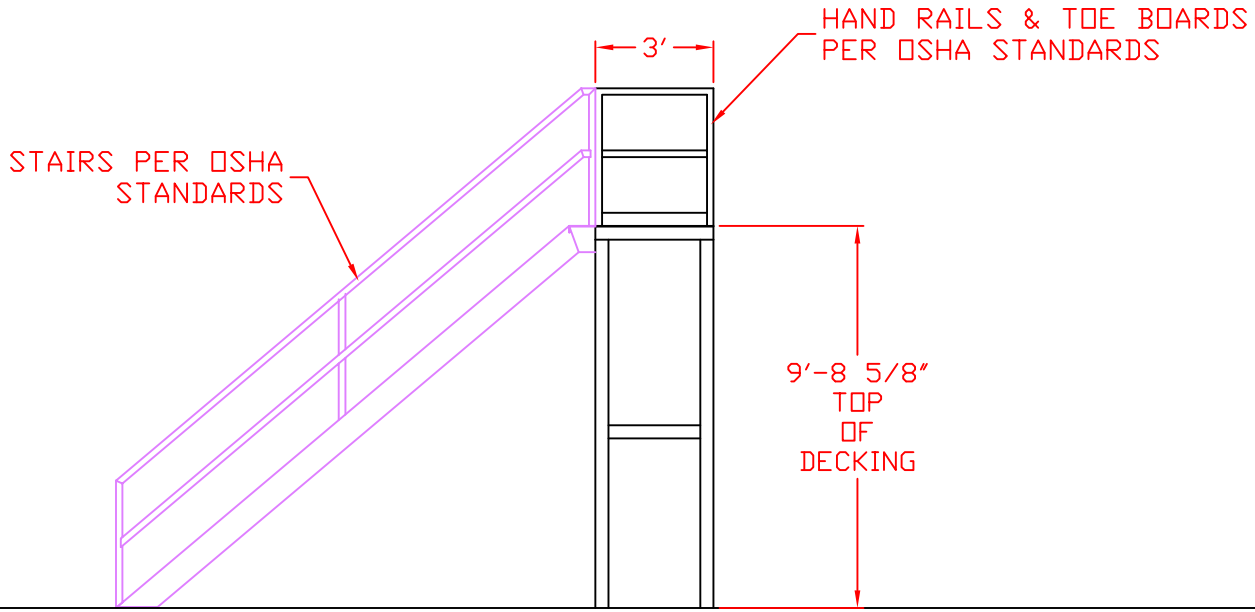

SIDE VIEW

FRONT VIEW

-QUANTIY OF 1 REQUIRED

-COLOR: PLATFORM - MARATHON MEDIUM BLUE
HANDRAILS AND STAIRS SAFETY YELLOW

-ESTIMATED REQUIRED DATE 3/22/2010

COPYRIGHT (C) 2010 MARATHON EQUIPMENT CO.

THIS DRAWINGS IS FOR THE SOLE PURPOSE OF SUPPLYING OVERALL DETAILS OF THIS PLATFORM ONLY. ALL CONSTRUCTION DETAILS, PROPER LOADING CALCULATIONS, AND COMPLIANCE'S ARE THE RESPONSIBILITY OF THE MANUFACTURER

TITLE:
SMALL OCC PLATFORM
CITY OF CONWAY

MARATHON
VERNON AL.
YERINGTON NV.
CLEARFIELD PA.

DR. DC	
CK.	APP.
DATE: 1/18/2010	
SCALE:	
TOL: ±1/16"	
DRAWING NO.	
SMALL OCC	

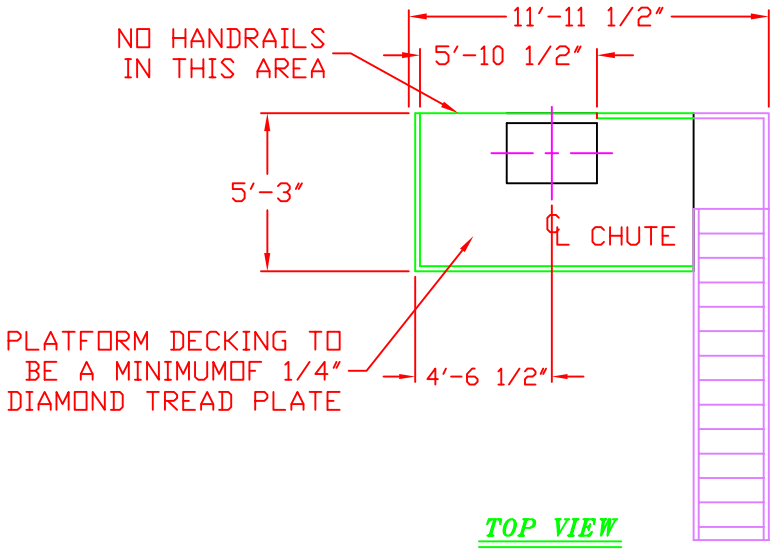

TOP VIEW

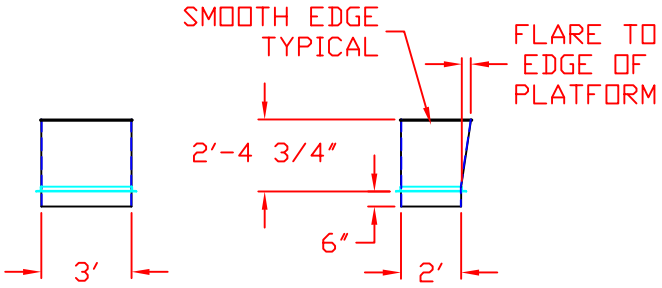

FRONT VIEW

SIDE VIEW

SORT CHUTE DETAILS
1 REQUIRED

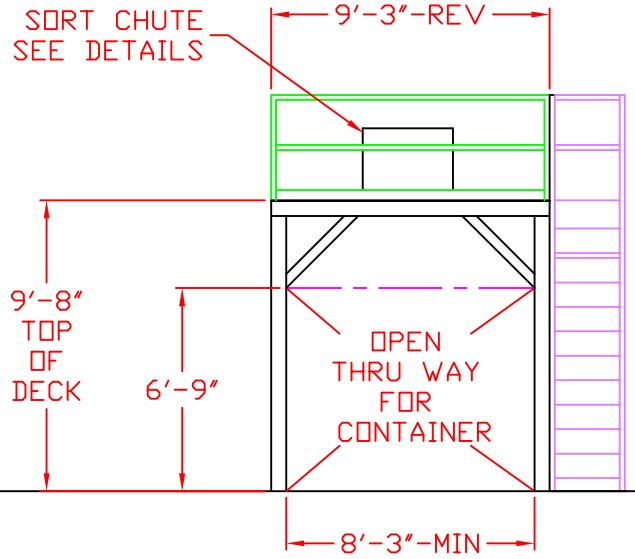

FRONT VIEW

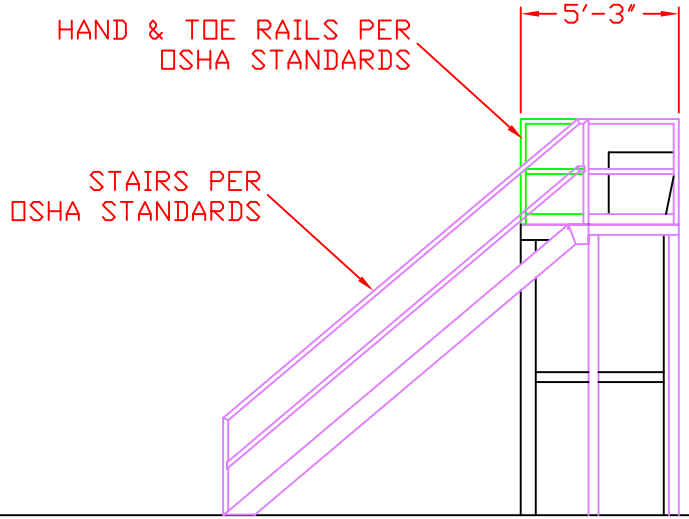

SIDE VIEW

MARATHON IS TO BE NOTIFIED OF ANY CHANGES IN OVERALL DIMENSIONS

COPYRIGHT (C) 2010 MARATHON EQUIPMENT CO.

THIS DRAWINGS IS FOR THE SOLE PURPOSE OF SUPPLYING OVERALL DETAILS OF THIS PLATFORM ONLY. ALL CONSTRUCTION DETAILS, PROPER LOADING CALCULATIONS, AND COMPLIANCE ARE THE RESPONSIBILITY OF THE MANUFACTURER

-QUANTITY OF 1 REQUIRED

-COLOR:
PLATFORM - MARATHON MEDIUM BLUE
CABIN - PER CUSTOMERS SPECS

-REQUIRED DATE ON OR BEFORE 4/1/2010

TITLE:
PLASTIC SORT PLATFORM
CITY OF CONWAY

MARATHON
VERNON AL.
YERINGTON NV.
CLEARFIELD PA.

DR. DC	
CK.	APP.
DATE: 1/18/2010	
SCALE:	
TOL: ±1/16"	
DRAWING NO. PLASTIC SORT	

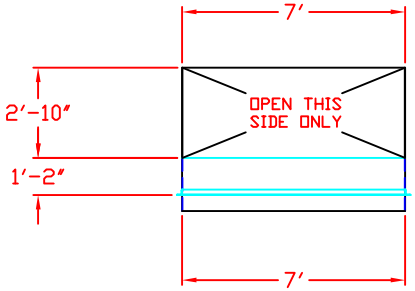

FRONT VIEW

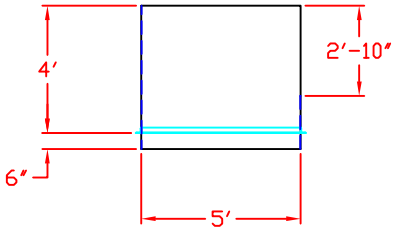

SIDE VIEW

PAPER DISCHARGE CHUTE
1 REQUIRED

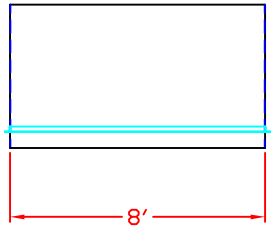

FRONT VIEW

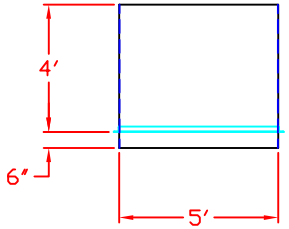

SIDE VIEW

OCC DISCHARGE CHUTE
1 REQUIRED

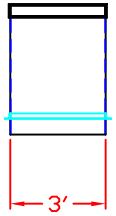

FRONT VIEW

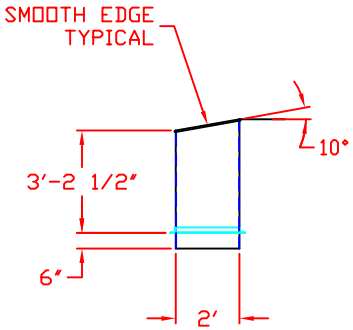

SIDE VIEW

SORT CHUTE DETAILS
2 REQUIRED

SORT CHUTE DETAILS FOR FIBER SORT PLATFORM

COPYRIGHT (C) 2010 MARATHON EQUIPMENT CO.

THIS DRAWINGS IS FOR THE SOLE PURPOSE OF SUPPLYING OVERALL DETAILS OF THIS PLATFORM ONLY. ALL CONSTRUCTION DETAILS, PROPER LOADING CALCULATIONS, AND COMPLIANCE'S ARE THE RESPONSIBILITY OF THE MANUFACTURER

-COLOR: PLATFORM - MARATHON MEDIUM BLUE

-ESTIMATED REQUIRED DATE 3/15/2010

TITLE:
FIBER SORT PLATFORM - CHUTE DETAILS
CITY OF CONWAY

MARATHON
VERNON AL.
YERINGTON NV.
CLEARFIELD PA.

DR. DC	
CK.	APP.
DATE: 1/18/2010	
SCALE:	
TOL: ±1/16"	
DRAWING NO. FIBER PLATFORM DWG 2 OF 2	

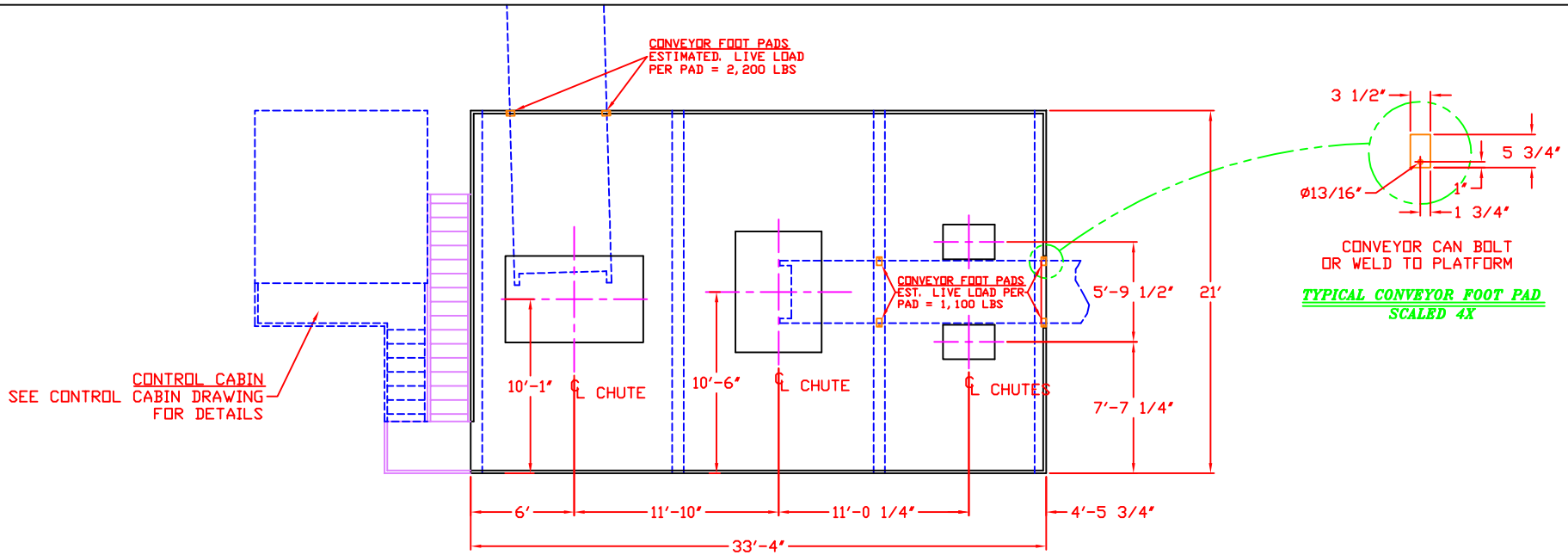

TYPICAL CONVEYOR FOOT PAD
SCALED 4X

TOP VIEW

SEE DRAWING 2 OF 2
FOR CHUTE DETAILS

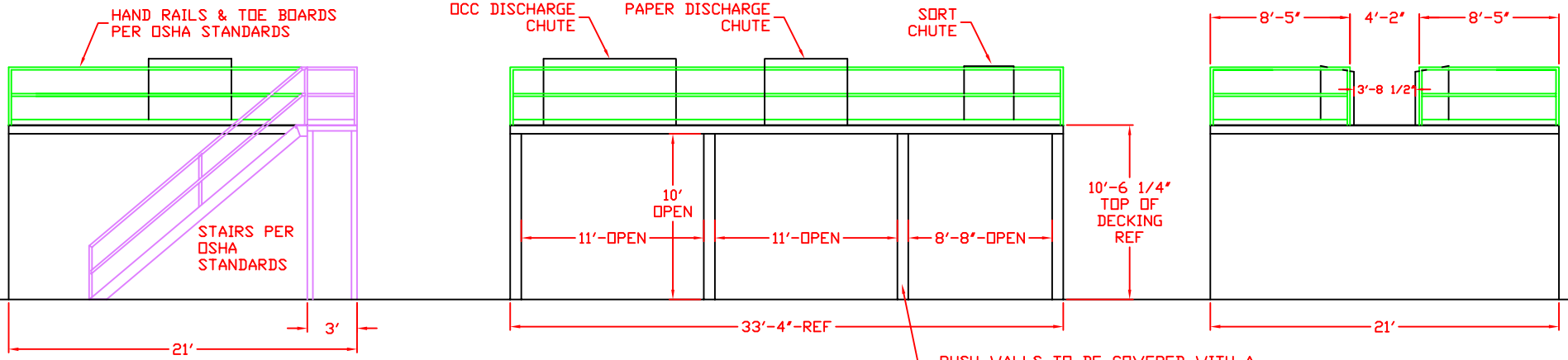

LH SIDE VIEW

SIDE VIEW

RH SIDE VIEW

PUSH WALLS TO BE COVERED WITH A MINIMUM ¼" THICK SMOOTH PLATING, AND CONSTRUCTED TO WITHSTAND FORCES GENERATED FROM MATERIALS BEING PUSHED THRU THE BUNKERS INTO THE BALER PIT.

MARATHON IS TO BE NOTIFIED OF ANY CHANGES IN OVERALL DIMENSIONS

-QUANTITY OF 1 REQUIRED

-COLOR:
PLATFORM - MARATHON MEDIUM BLUE
HANDRAILS & STAIRS - SAFETY YELLOW

-REQUIRED DATE ON OR BEFORE 3/15/2010

COPYRIGHT (C) 2010 MARATHON EQUIPMENT CO.

THIS DRAWINGS IS FOR THE SOLE PURPOSE OF SUPPLYING OVERALL DETAILS OF THIS PLATFORM ONLY. ALL CONSTRUCTION DETAILS, PROPER LOADING CALCULATIONS, AND COMPLIANCE ARE THE RESPONSIBILITY OF THE MANUFACTURER

TITLE:
FIBER SORT PLATFORM
CITY OF CONWAY

MARATHON
VERNON AL.
YERINGTON NV.
CLEARFIELD PA.

DR. DC	
CK.	APP.
DATE: 1/18/2010	
SCALE:	
TOL: ±1/16"	
DRAWING NO. FIBER PLATFORM DWG 1 OF 2	

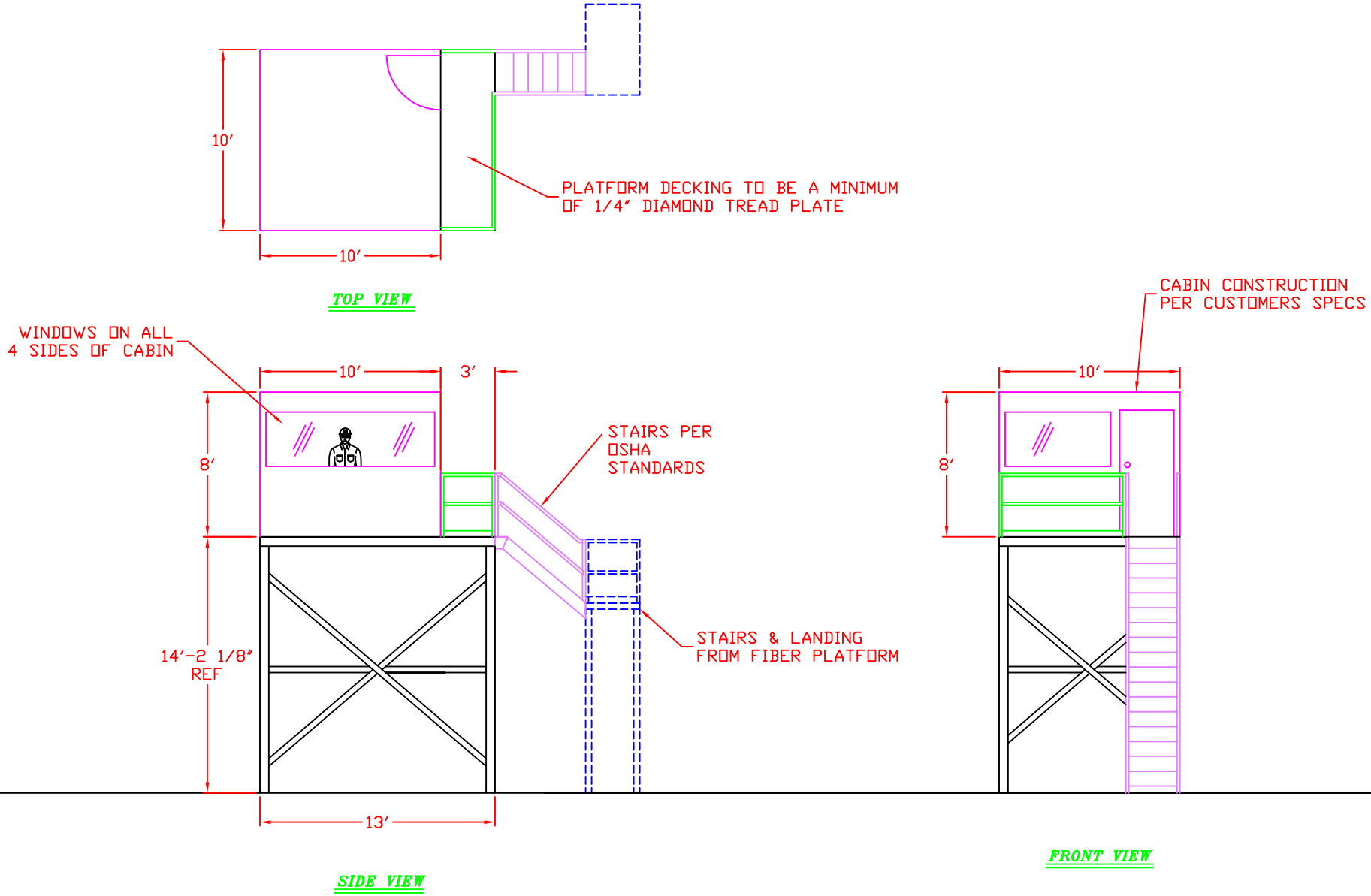

-QUANTITY OF 1 REQUIRED

-COLOR:
PLATFORM - MARATHON MEDIUM BLUE
CABIN - PER CUSTOMERS SPECS

-REQUIRED DATE ON OR BEFORE 3/15/2010

COPYRIGHT (C) 2010 MARATHON EQUIPMENT CO.

THIS DRAWINGS IS FOR THE SOLE PURPOSE OF SUPPLYING OVERALL DETAILS OF THIS PLATFORM ONLY. ALL CONSTRUCTION DETAILS, PROPER LOADING CALCULATIONS, AND COMPLIANCE ARE THE RESPONSIBILITY OF THE MANUFACTURER

TITLE:
CONTROL CABIN
CITY OF CONWAY

MARATHON
VERNON AL.
YERINGTON NV.
CLEARFIELD PA.

DR. DC	
CK.	APP.
DATE: 1/18/2010	
SCALE:	
TOL: ±1/16"	
DRAWING NO.	
CONTROL CABIN	

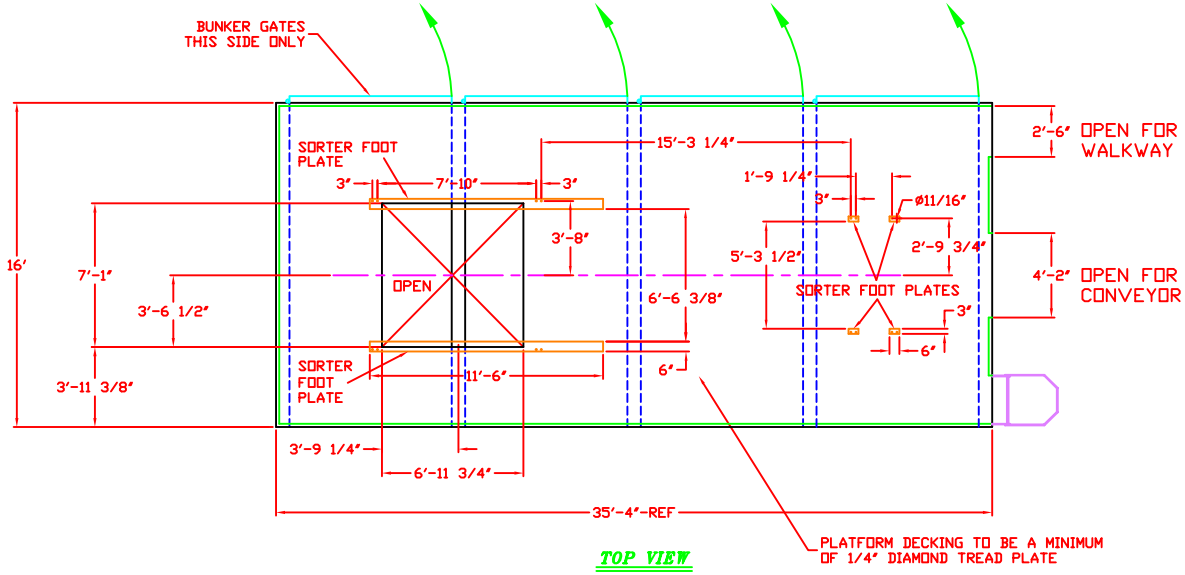

TOP VIEW

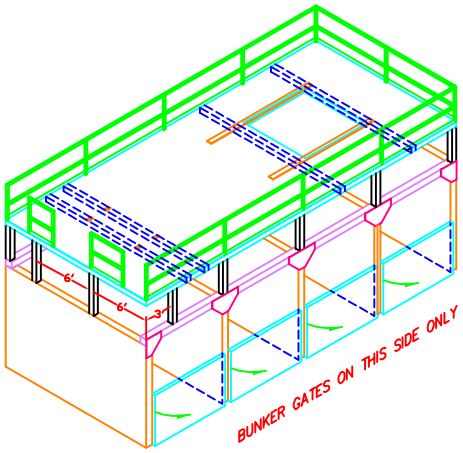

ISOMETRIC VIEW
LADDER NOT SHOWN

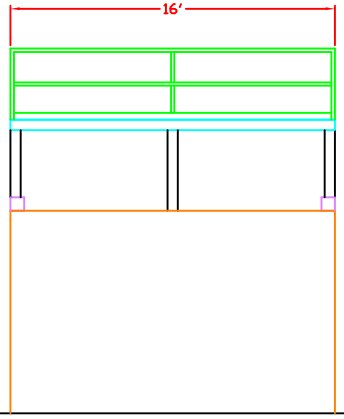

END VIEW

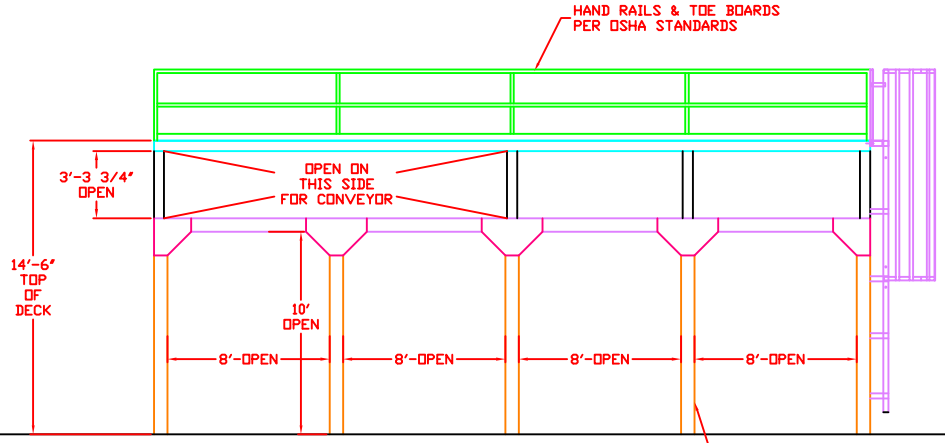

SIDE VIEW

PUSH WALLS TO BE COVERED WITH A MINIMUM ¼" THICK SMOOTH PLATING, AND CONSTRUCTED TO WITHSTAND FORCES GENERATED FROM MATERIALS BEING PUSHED THRU THE BUNKERS INTO THE BALER PIT.

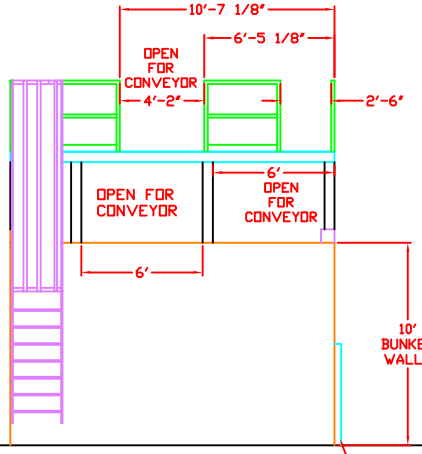

END VIEW

BUNKER GATES THIS SIDE ONLY

MARATHON IS TO BE NOTIFIED OF ANY CHANGES IN OVERALL DIMENSIONS

COPYRIGHT (C) 2010 MARATHON EQUIPMENT CO.

THIS DRAWINGS IS FOR THE SOLE PURPOSE OF SUPPLYING OVERALL DETAILS OF THIS PLATFORM ONLY. ALL CONSTRUCTION DETAILS, PROPER LOADING CALCULATIONS, AND COMPLIANCE ARE THE RESPONSIBILITY OF THE MANUFACTURER

-QUANTITY OF 1 REQUIRED

-COLOR:
PLATFORM - MARATHON MEDIUM BLUE
HANDRAILS & STAIRS - SAFETY YELLOW

-ESTIMATED REQUIRED DATE 3/24/2010

TITLE:
CONTAINER PLATFORM
CITY OF CONWAY

MARATHON
VERNON AL.
YERINGTON NV.
CLEARFIELD PA.

DR. DC	
CK.	APP.
DATE: 1/18/2010	
SCALE:	
TOL: ±1/16"	
DRAWING NO.	
CONT PLATFORM	

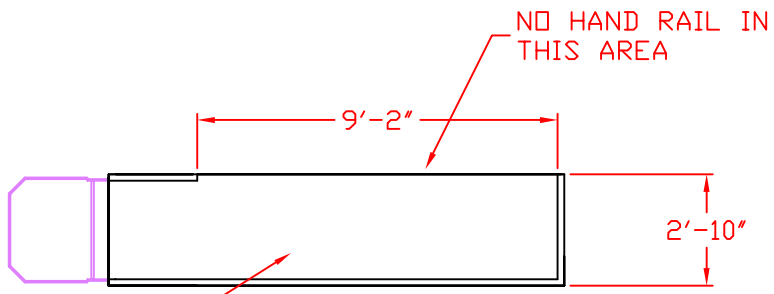

TOP VIEW

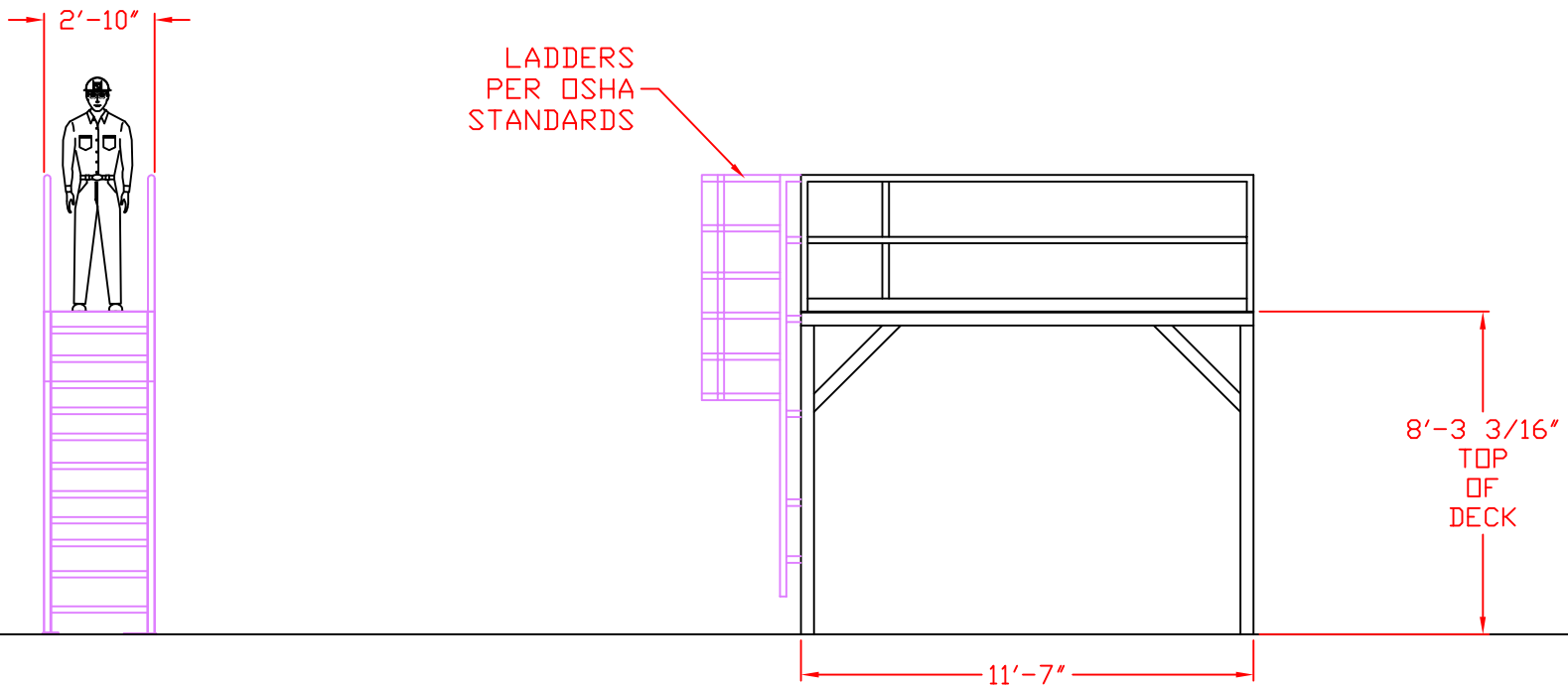

SIDE VIEW

-QUANTIY OF 1 REQUIRED

-COLOR: PLATFORM - MARATHON MEDIUM BLUE
HANDRAILS AND STAIRS SAFETY YELLOW

-ESTIMATED REQUIRED DATE 3/22/2010

COPYRIGHT (C) 2010 MARATHON EQUIPMENT CO.

THIS DRAWINGS IS FOR THE SOLE PURPOSE OF SUPPLYING OVERALL DETAILS OF THIS PLATFORM ONLY. ALL CONSTRUCTION DETAILS, PROPER LOADING CALCULATIONS, AND COMPLIANCE'S ARE THE RESPONSIBILITY OF THE MANUFACTURER

TITLE:
BAG BREAKER MAINT PLATFORM - RIGHT
CITY OF CONWAY

MARATHON
VERNON AL.
YERINGTON NV.
CLEARFIELD PA.

DR. DC	
CK.	APP.
DATE: 1/18/2010	
SCALE:	
TOL: ±1/16"	
DRAWING NO. BB MAINT PLATFORM RH DWG 2 OF 2	

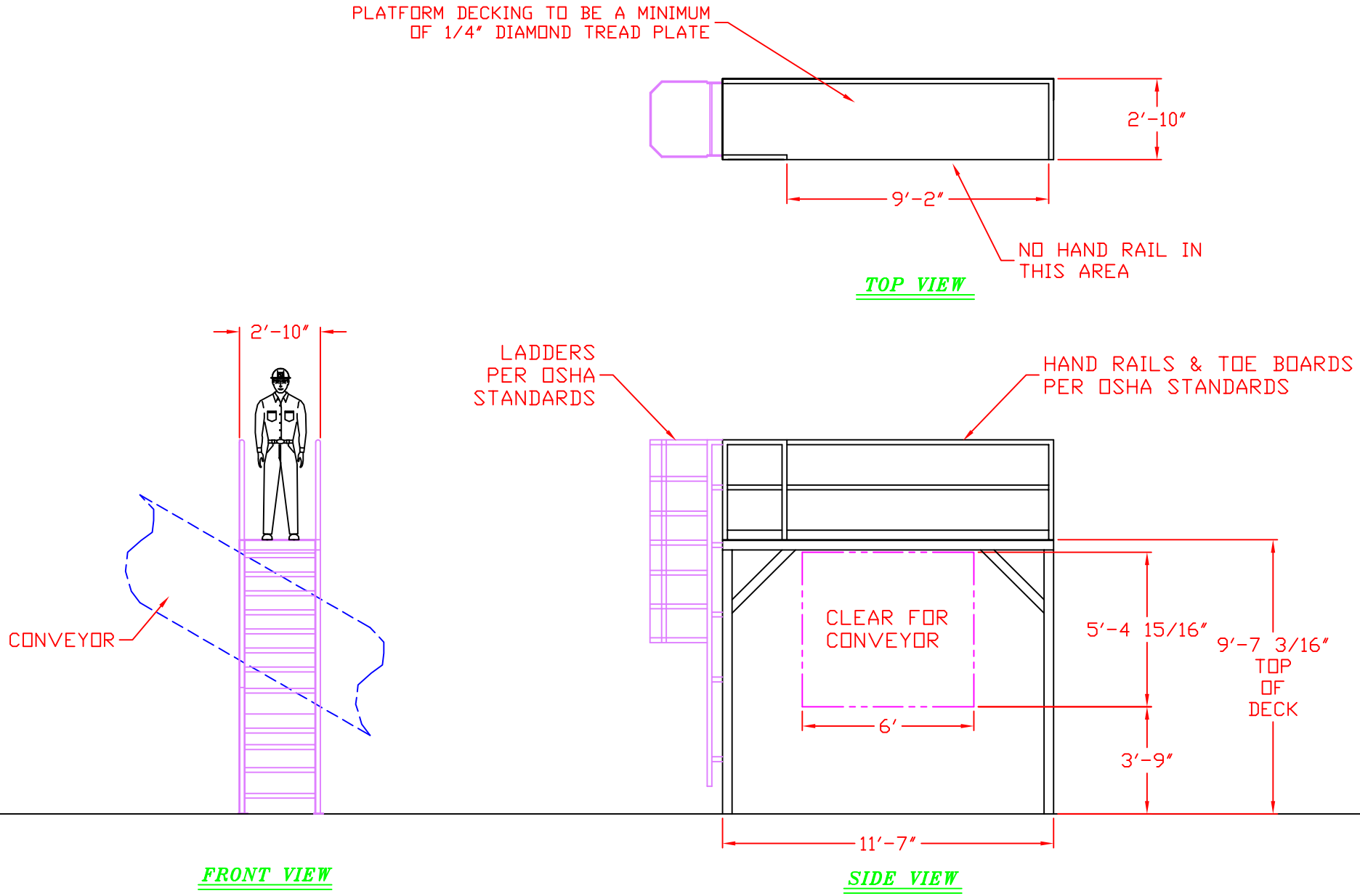

-QUANTIY OF 1 REQUIRED

-COLOR: PLATFORM - MARATHON MEDIUM BLUE
HANDRAILS AND STAIRS SAFETY YELLOW

-ESTIMATED REQUIRED DATE 3/15/2010

COPYRIGHT (C) 2010 MARATHON EQUIPMENT CO.

THIS DRAWINGS IS FOR THE SOLE PURPOSE OF SUPPLYING OVERALL DETAILS OF THIS PLATFORM ONLY. ALL CONSTRUCTION DETAILS, PROPER LOADING CALCULATIONS, AND COMPLIANCE'S ARE THE RESPONSIBILITY OF THE MANUFACTURER

TITLE:
BAG BREAKER MAINT PLATFORM – LEFT
CITY OF CONWAY

MARATHON
VERNON AL.
YERINGTON NV.
CLEARFIELD PA.

DR. DC	
CK.	APP.
DATE: 1/18/2010	
SCALE:	
TOL: ±1/16"	
DRAWING NO. BB MAINT PLATFORM LH DWG 1 OF 2	

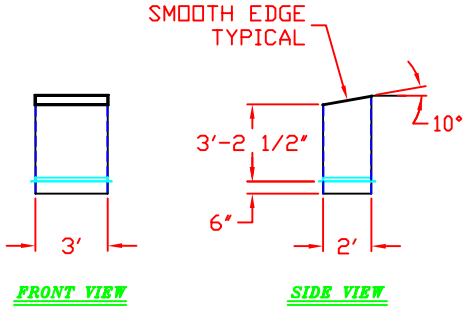

TYPICAL CHUTE DETAILS
4 REQUIRED

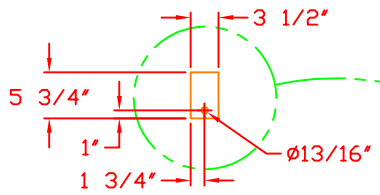

TYPICAL CONVEYOR FOOT PAD
SCALED 4X

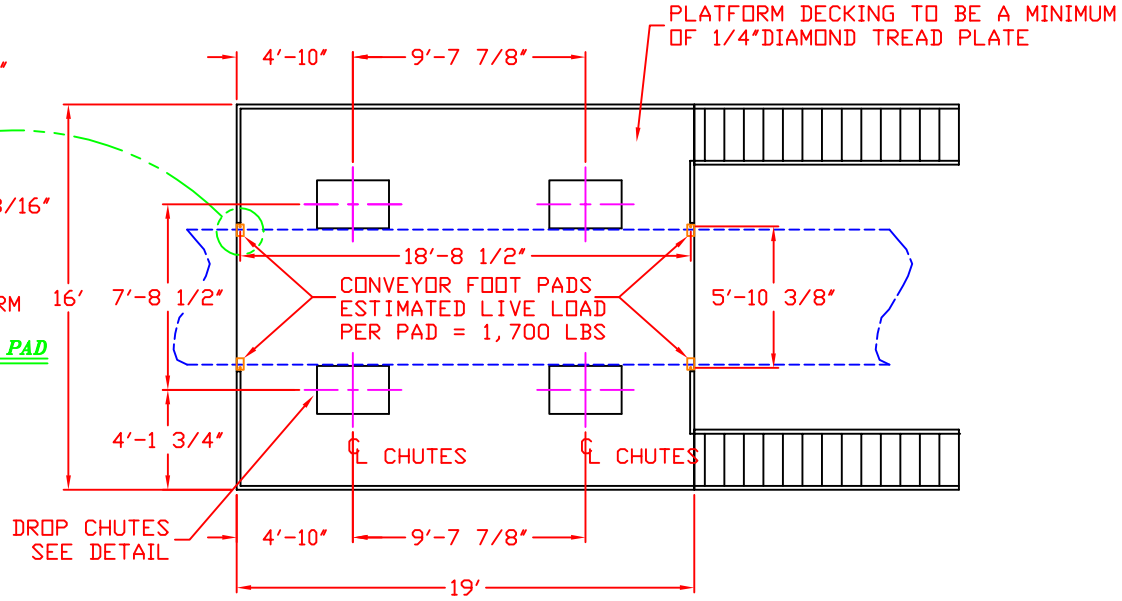

TOP VIEW

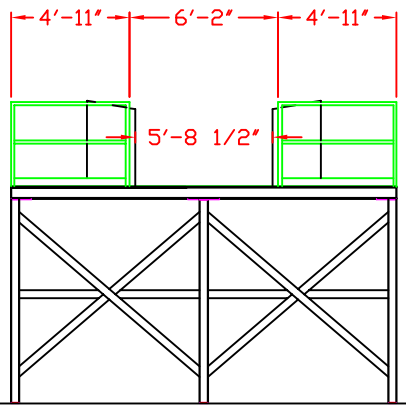

END VIEW

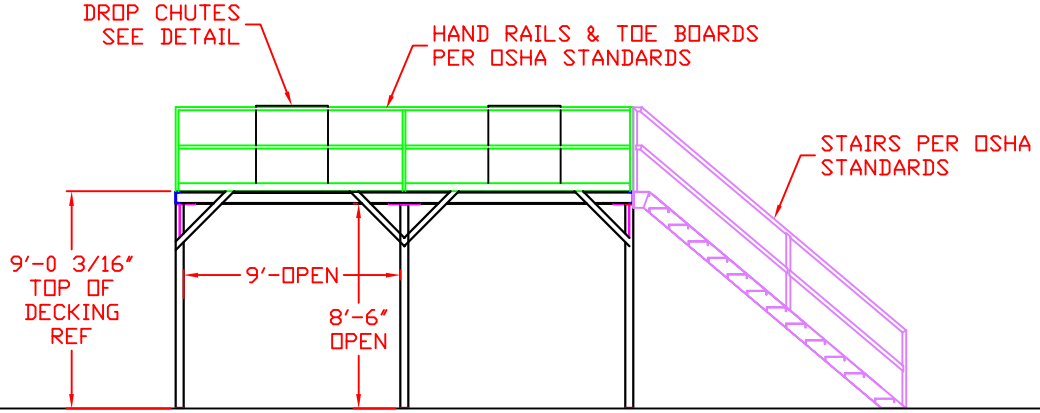

SIDE VIEW

MARATHON IS TO BE NOTIFIED OF ANY CHANGES IN OVERALL DIMENSIONS

COPYRIGHT (C) 2010 MARATHON EQUIPMENT CO.

THIS DRAWINGS IS FOR THE SOLE PURPOSE OF SUPPLYING OVERALL DETAILS OF THIS PLATFORM ONLY. ALL CONSTRUCTION DETAILS, PROPER LOADING CALCULATIONS, AND COMPLIANCE ARE THE RESPONSIBILITY OF THE MANUFACTURER

-QUANTITY OF 1 REQUIRED

-COLOR:
PLATFORM - MARATHON MEDIUM BLUE
HANDRAILS & STAIRS - SAFETY YELLOW

-ESTIMATED REQUIRED DATE 3/15/2010

TITLE:
SORT PLATFORM
CITY OF CONWAY

MARATHON
VERNON AL.
YERINGTON NV.
CLEARFIELD PA.

DR. DC	
CK.	APP.
DATE: 1/18/2010	
SCALE:	
TOL: ±1/16"	
DRAWING NO.	
SORT PLATFORM	

Additional Information

The bidder shall include all charges, including taxes, fees, and shipping. (If applicable)

The bidder needs to include an anticipated delivery date. (If applicable)

In submitting this bid, it is understood by the undersigned bidder that the right is reserved by the City of Conway to reject any and all bids:

Contact Information: Cheryl Harrington

cheryl.harrington@cityofconway.org

City of Conway Sanitation Department
(501)450-6155

Bid Specifications can be obtained from our website:
www.cityofconway.org

****Please be sure to mark envelope:**
Bid Number - 2010-21
Bid Opening Date:
Thursday, February 18th, 2010 @ 10:00am

City of Conway
2010-21 – Platforms & Stairs
Automated Sorting Line
Bid Opening Date: Thursday, February 18th, 2010
City Hall - Downstairs Conference Room @ 10:00am
www.cityofconway.org

Total Cost of Platforms & Stairs for Automated Sorting Line

$ _____

Unsigned bids will be rejected:

Authorized Agent Bidding on this project:

_____
Company Name

_____
Company Representative Name

_____
Representative's Signature

_____
Address Email Address

_____
City State Zip

_____
Telephone Number Fax Number

_____
Date

Please feel free to submit additional information on this bid on a separate piece of paper; however this sheet should be included & signed with any bid submitted.

City of Conway – Mayor's Office
Terms & Conditions
www.cityofconway.org
Important – Read Carefully

By Submission of bid, bidder certifies that he has read all terms and conditions and that bid is submitted in accordance therewith.

1. Prices quoted will be considered to be net prices unless otherwise stated by the bidder. Cash discounts requiring payments in less than 30 days will not be considered in making awards.
2. Prices quoted shall be FOB Conway unless otherwise specifically stated on proposal. In either case, delivery charges must be prepaid.
3. All charges including taxes, shipping, freight, and any miscellaneous taxes shall be included in prices quoted, if applicable.
4. Bidder certifies that he will make delivery of items for which he bids within 10 days after receipt of award – ***unless otherwise specifically stated***. Time of delivery in excess of 10 days may be considered a factor in making awards.
5. In case of default of contractor in making deliveries as per contract, the City may procure the articles or services from other sources and hold the contractor responsible for all excess costs occasioned thereby. Bidder's record as to satisfactory performance under previous contracts will be considered a factor in making awards and retention on bid lists.
6. The City reserves the right to reject any or all bids, in part or in whole and to waive information in bids received.
7. If not otherwise specified, bidder must furnish brand names with catalog number, if any, on items which are offered as "equal." In all such cases the burden of establishing equality is upon the bidder and failure to do so within a reasonable time may result in rejection. Alternative bids will not be considered unless no other type bid for the item is received.
8. In the case of equal or tie bids, preference will be given to Arkansas bidders. Other than as stated in the first sentence, awards on tie bids will be made at the discretion of the purchasing official. In such cases, "splitting" will be avoided and awards of previous contract(s) to one or more of the bidders will not be a factor.
9. In the event that bidder is unable to furnish all of an item, bids on portions thereof may be considered.
10. Final inspections and acceptance or rejection will be made after delivery. Items rejected because of non-conformance shall be removed and replaced immediately with those which meet specifications, all at the expense of the contractor. In the event that necessity requires the use of non-conforming items, payment therefore will be made at a proper reduction in price which shall be not greater than contractor's actual cost by purchase, fabrication, manufacture or other production method plus transportation paid to carriers. All costs in connection with testing items that do not meet specifications shall be paid by contractor.
11. Quality, time of performance, probability of performance, and location of bidder will be factors in awards of all contracts.
12. The City reserves the right to purchase any, all or none of the items listed, in combinations thereof that may be in the best interest of the City of Conway.

13. The City reserves the right to change any specifications, terms and/or conditions at any time, with adequate notice in writing to bid invitees of those changes, if any.
14. The City is qualified for "GSA" pricing schedules***, if available and applicable***.
15. The City reserves the right to waive any informalities or minor defects, but this shall not be construed to indicate waiver of any specification, term and/or condition unless in the best interest of the City in the judgment of the City.
16. **CONSTRUCTION/INSTALLATION:** Any construction work that is worth $20,000 or more must comply with Arkansas Code Annotated § 22-9-204.
17. **Arkansas Prevailing Wage Law A.C.A. §22-9-301 through 3-15:** The City of Conway, general contractors or any subcontractors is subject to the Arkansas Prevailing Wage Law, A.C.A. **§22-9-301 through 3-15.** The Labor Standards Division enforces laws related to prevailing wage (PDF). Arkansas's prevailing wage law is commonly referred to as the "little Davis-Bacon Act." The law requires the division to issue a wage determination for each public works project where the cost of all labor and materials exceeds $75,000. *Exemptions are public school construction; work done for or by any drainage, improvement, or levee district; highway, road, street or bridge construction and maintenance, or related work contracted for or performed by incorporated towns, cities, counties, or the Arkansas Highway Department.* If you need a copy of the Prevailing wage Regulation and Laws that are required; this information is available at http://www.arkansas.gov/labor/pdf/prevailing_wage_regs.pdf.
18. **PROHIBITED INTEREST CONDITION:** No official of the City authorized on behalf of the City to specify, plan, design, negotiate, make, accept or approve, or take part in specifying, planning, negotiating, making, accepting or approving any construction or material purchase contract or any subcontract in connection with any purchase made by the City of Conway shall become directly or indirectly interested personally in the purchase in the purchase or any part thereof.
19. **EQUAL OPPORTUNITY IN EMPLOYMENT:** All qualified bidders will receive consideration without regard to race, color, religion, sex, age, disability or national origin.